Quincy Lab, Inc.

Model AFE - LT Low-Temp Series Ovens

With Microprocessor Control & Digital Display

OPERATING MANUAL

Standard Contents

(1) AFE Series Low-Temp Oven
(2) Adjustable chrome wire shelf
(4) Shelf brackets

⚠ **Not For Use With Flammable Solvents or Gases.**

SPECIFICATIONS	MODEL 10AFE-LT	MODEL 20AFE-LT	MODEL 30AFE-LT	MODEL 40AFE-LT
INTERIOR DIMENSIONS				
INCHES W x H x D	12x8.63x10	13x11.63x13	18x14.63x12	18x19.63x14
(CM) W x H x D	30.5x22x25.4	33x29.5x33	45.7x37x30.5	45.7x50x35.5
EXTERIOR DIMENSIONS				
INCHES W x H x D	14x20.5x12	15x24.5x15	20x28.5x14	20x33.5x16
(CM) W x H x D	35.5x52x30.5	38x61x38	52x72.4x35.5	52x85x40.63
TEMPERATURE RANGE Ambient + 15F to F / C	225/107	225/107	225/107	225/107
CONTROL STABILITY @ 75C	+/- 0.8°C	+/- 0.8°C	+/- 1.0°C	+/- 1.0°C
STANDARD ELECTRICAL				
VOLTS/AMPS	115/2.9*	115/3.8*	115/6.9*	115/6.9*
WATTS	440	440	800	800
PLUG/NEMA	5-15P*	5-15P*	5-15P*	5-15P*
WEIGHT (lbs)				
SHIPPING	44	61	78	94
STAND ALONE	38	54	70	85

* Standard models voltage only, optional 220 voltage available. Check label on back of unit.

Common Unit Construction

Exterior: Powder Coated Steel
Insulation: Fiberglass
Thermo-control: PID Microprocessor
Interior: Aluminized Steel (stainless optional)
Motor: Sleeve Bearing, Thermally Protected
Heater: Resistive-Tubular Incoloy

Safety Precautions ⚠ Read Operating Instructions Thoroughly Prior to Operation

⚠ The AFE Series lab ovens are not designed for use with any flammable solvents or gases or for materials that may contain flammable solvents or gases. Use only a grounded outlet that is rated for your model's electrical requirement. Oven exterior walls and doors may become hot to the touch when operating at higher set temperatures. Do not leave the oven unattended during operation, especially when processing materials that have flash point temperatures lower than the model oven's maximum operating range. Do not modify the oven or control parameters to operate the oven above the stated maximum operating temperature.

Set-up

Position unit in its ultimate operating location. Keep a minimum of 2" of airspace around the unit and a minimum of 10" above the unit. Important: The exhaust ports should NOT be used as chamber access for temperature-measuring probes. Insertion of any such probe or device may damage or unbalance the circulating fan blade at the top of the oven chamber.

Install adjustable shelf by placing the ends of the wire shelf bracket into the corresponding holes located on the inner sides of the oven at the desired height. Push the ends of the bracket into the holes until the first bends in the bracket are against the wall, then rotate the bracket down. Place the shelf on the brackets. **(FIG 1)**

Plug the unit into a grounded outlet for your unit's rated voltage.

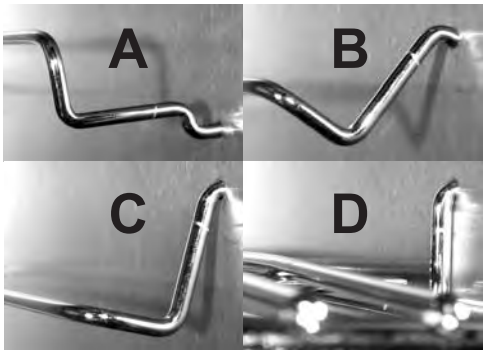

FIG. 1

General Operation

The unit is ready for your immediate use. All control parameters, calibration and tuning has been done at the factory, no adjustments are necessary.

Push the illuminated power button. The fan motor will start. All LED's on the temperature control will light-up for 5 seconds until the current or actual chamber temperature is displayed.

To view the set temperature press the star key. To change the set temperature hold the star key together with the up (raise temp) or down (lower temp) arrow key until the desired temperature is indicated on the LED display. (FIG. 2) The temperature control is set at the factory to read in 1/10th degree ^{o} F or Fahrenheit units.

To change temperature units or display resolution see: Menu Level Functions (page 3).

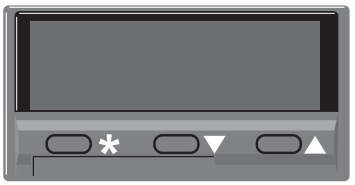

*	View Setpoint in ^{o}C / ^{o}F units
* ▲	Increase Setpoint
* ▼	Decrease Setpoint
▼ ▲	(3 sec.) Enter/Exit Menu Levels

(PRESS)

FIG. 2

Once the unit nears the desired temperature allow the unit to cycle for 20 minutes at set point before temperature becomes fully stable. NOTE: Upon each initial powering-up, the control may typically overshoot the set temp by 3 or 4 degrees especially if the temperature set point is close to the operating ambient temperature. After equilibrium is achieved the control will hold set temperature within 1 unit degree.

Chamber Loading

Article processing times and temperature uniformity are largely dependent on load density and positioning. Load the oven so that air circulation within the oven is not impaired. Here are some general guidelines:

Leave a space between multiple articles on a shelf.

Position articles on shelves as shown in **(FIG 4, see insert),** for best results avoid placing articles or media against or within an inch of the walls, especially on the lower shelf, allowing unrestricted air flow around articles and contributing to even and consistent heating.

Use of large solid trays, or foil on shelves severely limits the oven's ability to distribute heat evenly and uniformly. **(FIG 5, see insert)** Since not enough heat rises within the chamber, thermometer readings give false indication that temperature setting is too low. Higher temperature adjustments made as a result of these readings could overheat the lower-placed articles or media.

Continued on insert....

Chamber Loading

Article or media processing times and temperature uniformity are largely dependent on load density and positioning. Load the oven so that the air circulation within the oven is not impaired. Here are some general guidelines:

Leave a space between multiple articles on a shelf.

Position articles on shelves as shown in **(FIG 4),** for best results avoid placing articles or media against or within an inch of the walls, especially on the lower shelf, allowing unrestricted air flow around articles and contributing to even and consistent heating.

Use of large solid trays, or foil on shelves severely limits the oven's ability to distribute heat evenly and uniformly. **(FIG 5)** Since not enough heat rises within the chamber, thermometer readings give false indication that temperature setting is too low. Higher temperature adjustments made as a result of these readings could overheat the lower-placed articles or media.

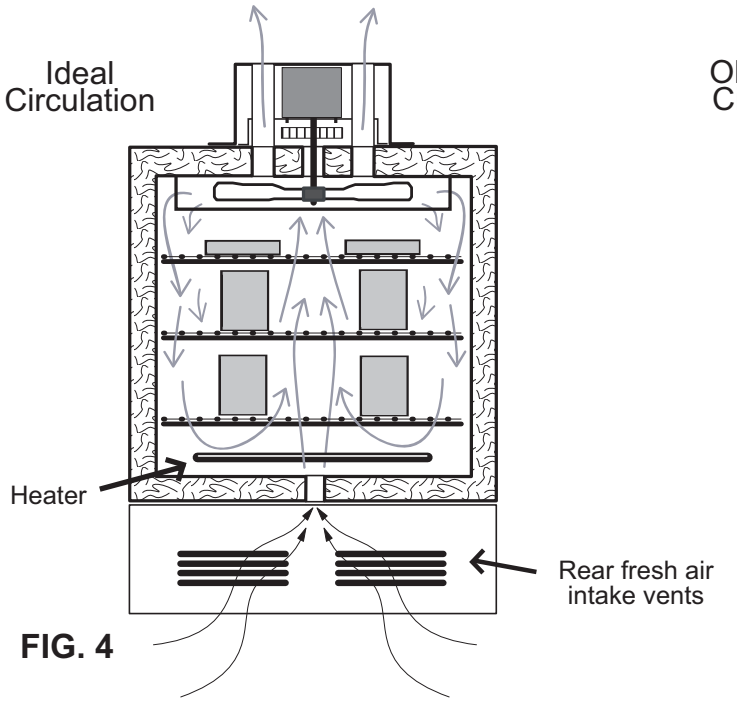

FIG. 4

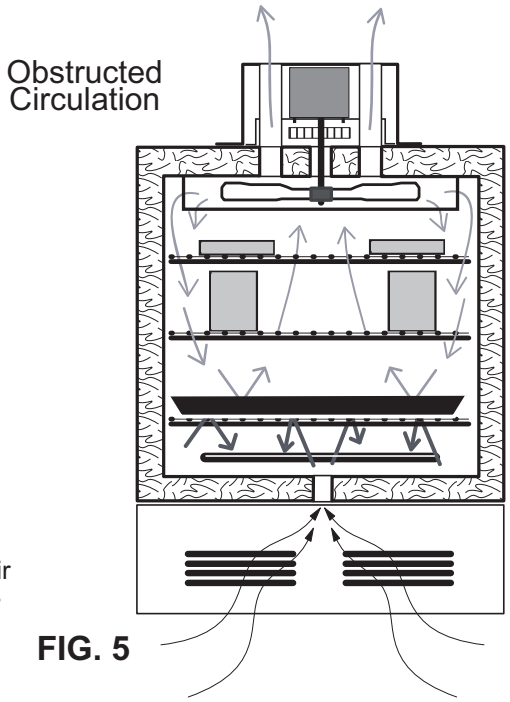

FIG. 5

Do not overload the unit with large (in quantity OR size), or high-density loads. This will show by non-uniform processing and long or impossible "heat-through" times. To help determine a large load's suitability, compare the time it takes for the temperature to recover to the original empty chamber set temperature once load is placed. To reduce recovery time, reduce load accordingly. Also, large loads such as a beaker containing 2 liters of solution, may require an elevated set temperature for the solution to reach and maintain a lower target temperature.

Care should also be taken to avoid placing items on the top-most shelf too close to the holes in the fan plenum. This will restrict the flow of air passing through the plenum and reduce the amount of pre-heated air being circulated through the entire chamber and cause longer than normal heat-through times and inconsistent or unstable oven temperatures.

For best processing performance for a single item, adjust one shelf so that the article is centered in the oven chamber.

NOTE: The unit's minimum operating temperature is largely determined by ambient temperature. The unit can operate 20 degrees F (approximately 10 degrees C) above room temperature but temperature stability may be degraded. Temperature stability improves appreciably for settings that exceed ambient by 30 degrees F or better. As a general rule, the lower the ambient temperature, the lower the maximum adjustable operating temperature.

Menu Level Functions

Access the menu levels for the following functions: (all **user applicable functions** and their menu locations are high-lighted in white in the Functions Menu Guide below).

- ~ Change control to read in C or F temperature units.(unit in level 2)
- ~ Change to whole degree or 1/10th degree display resolution.(d.SP in level 2)
- ~ Run or Read temperature tracking.(ChEK or rEAd in level 3)
- ~ Lock Temperature setting against inadvertent adjustment.(SP.LK in level 1)
- ~ Calibrate control temperature to an external standard.(2Ero in level 3)

FIG. 3

To access the menu levels:

Press and hold both arrow keys for 3 seconds then release when the "tunE" function prompt is displayed from within LEVEL 1. When in the function menu the LED display will alternate the function prompt with the current function setting when keys are released. See "menu entry point" in the Functions Menu Guide below.

To navigate within the menu:

Press the down arrow to move "left" into menu LEVEL SELECTION (LEVL level 1) **(FIG 3)**. Use up and down arrow keys individually to move "right" or "left" within a level. Hold star key and up or down arrow keys to move "up" or "down" through levels 1, 2 and 3. (Note: you must be at LEVL prompt to move up/down thru levels)

To change the function setting:

Once at the desired level function prompt, press and hold the star key and press the up or down key to select or change function setting. Release star key to set the function. Press the up and down keys together to return to temperature display or control will auto-return in 60 seconds.

Functions Menu Guide

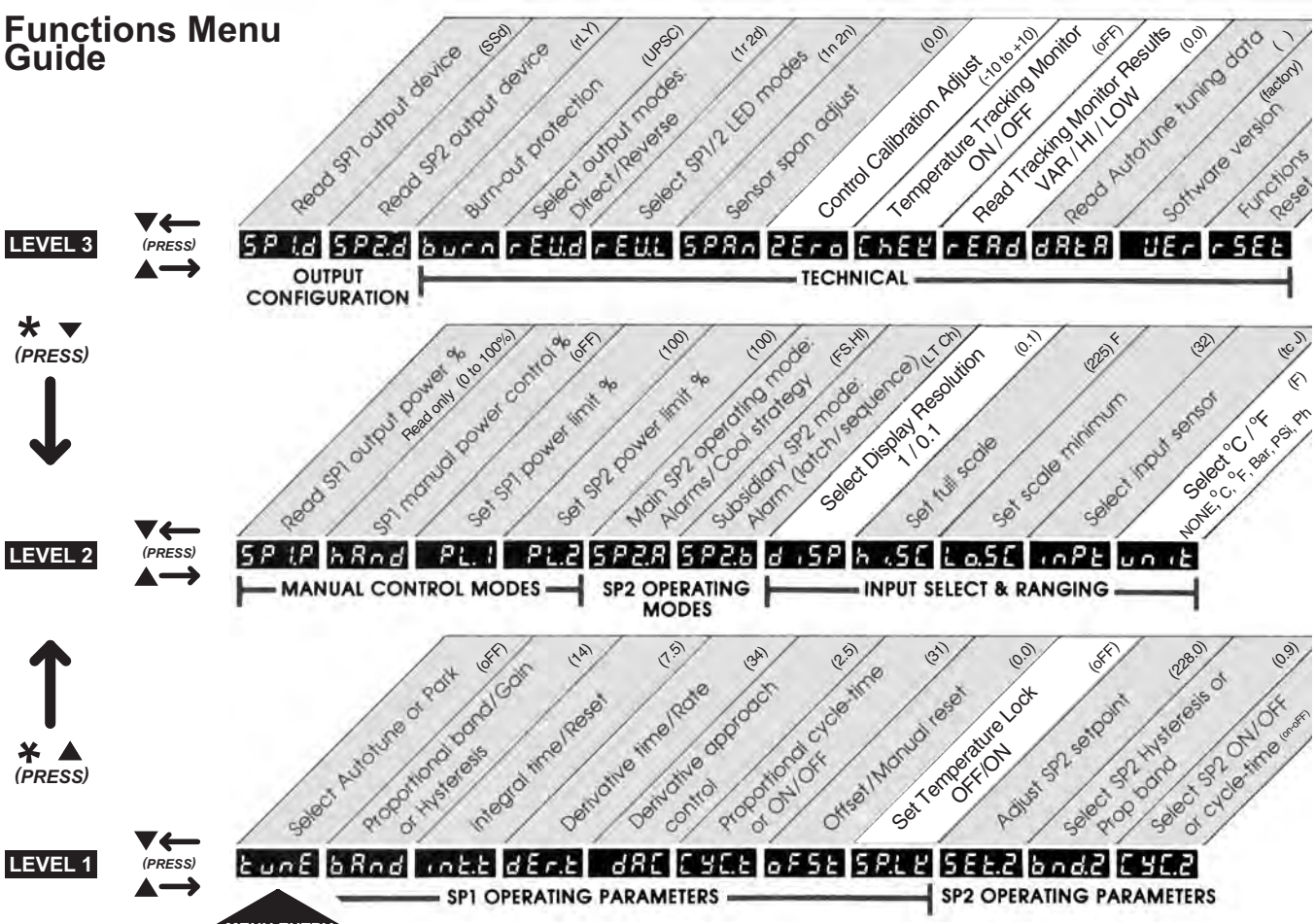

IMPORTANT NOTE: The grey-shaded control functions within the menu levels are factory tuned and set for the optimum performance and basic operational safety of your oven's model. Care should be taken when navigating or changing **user applicable function** settings so as not to alter these factory settings. Factory settings for each function are listed within the "( )" in each prompt tab above to use as a trouble-shooting reference.

Temperature Tracking Feature (example shows readings in degrees C)

This feature monitors the temperature stability of the control during processing. It will record and display: The total variation or spread between high and low, the absolute or maximum high and the absolute or minimum low.

To start the tracking feature, navigate to the function prompt "ChEK" in menu level 3. While holding the star key press the up arrow key to select ON. The control will now track the temperature variation until "ChEK" function is turned off. Recorded readings are retained in memory until "ChEK" is turned on again. Once "ChEK" is turned on the control will return to the normal temperature display after 60 seconds.

You can view readings at any time during or after tracking feature has been turned off. But de-powering the unit will reset "ChEK" to OFF and clear stored data. To view readings navigate to "rEAd" prompt in menu level 3. Then:

Release ▼ or ▲

Press/Hold ✱
Displays **variance**
(0.6° C)

Press/Hold ✱
Press ▲ once
Displays **maximum**

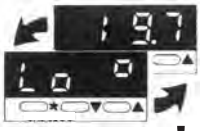

Press/Hold ✱
Press ▲ once more
Displays **minimum**

TIP: To avoid erroneous tracking data from run-up temperatures or door openings, start the Tracking feature after articles have been placed and temperature steadies at set point.

Control Self Diagnostics

Control prompts will only display when a fault or alarm condition exists.

Thermocouple burnout
Check sensor/wiring

Non-volatile memory error
De-power briefly
Replace unit if it persists

PRESS ▼ ▲

(Press ▼▲ together to clear alarm condition)

Alarm condition: Temp exceeded maximum operating temp (225°F). ***Heater shutdown until manually reset. Typically indicates relay or temperature control failure. Replace relay or temp control if persists.***

⚠ Periodic Oven Maintenance

The AFE Series Lab Ovens are designed to be virtually maintenance free. But operational safety requires periodic cleaning and chamber temperature accuracy verification. Periodically check the rear air intake vents for dirt or dust build-up. Keep the intake & exit ports clear of obstruction and clean of dust and dirt. Once a year, check the actual oven chamber temperature against a known accurate temperature measurement device. Maintain temperature accuracy to within 10 degrees F of the control setting. Calibrate the control as necessary. To clean exterior and interior surfaces, use a damp cloth or with an all-purpose cleaner. Avoid commercially available oven cleaners.

Technical Support

If you have any questions or need technical assistance, please contact Quincy Lab Tech Support at:

Email: information@quincylab.com
Voice: 800-482-HEAT (4328)
Fax: 773-622-2282

Quincy Lab, Inc.
1925 N Leamington Ave
Chicago, Illinois 60639

Limited Warranty

Quincy Lab, Inc. warrants to the original purchaser that this product will be free from defects in material and workmanship under normal use throughout the warranty period. The standard warranty period for this instrument is eighteen months from date of shipment. The instrument warranty is supplemented with a three year warranty on the heating element. Please refer to your invoice or shipping documents to determine the active warranty period. This warranty covers parts & labor (labor at factory only) and shipping cost for replacement parts.